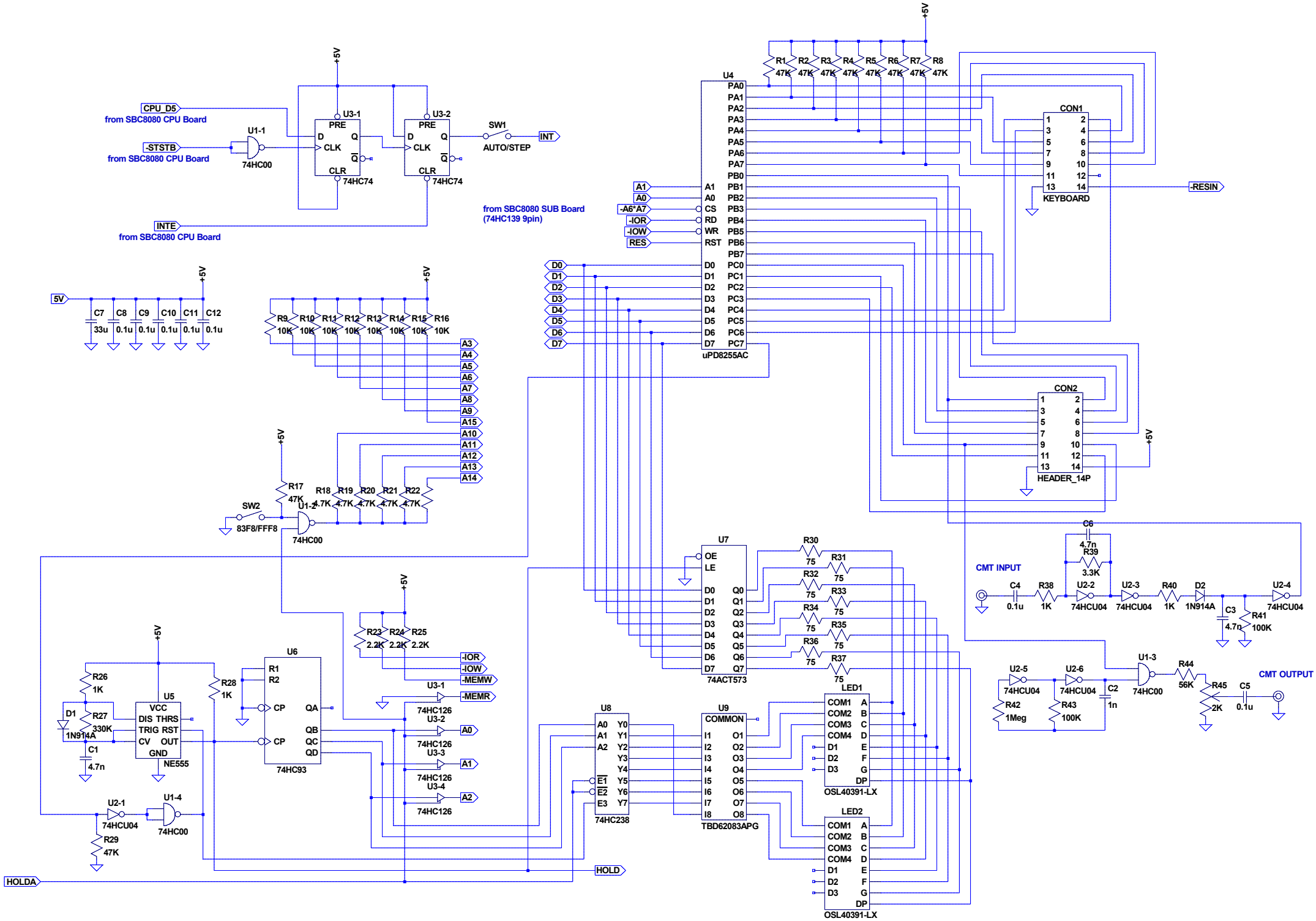

--- TK-80 SUB Board Schematics for SBC8080 ---