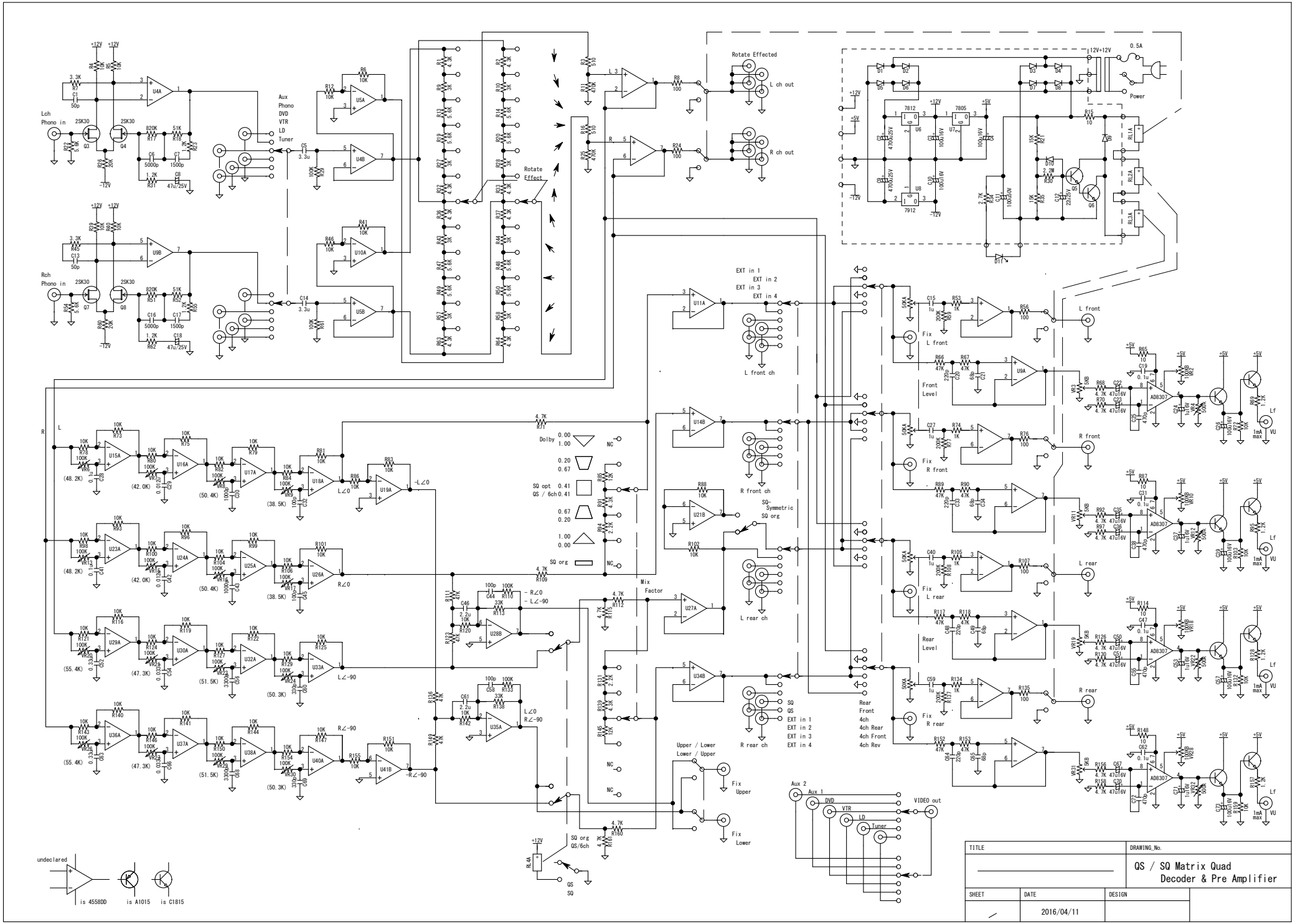
Lch
Phono in
Rch
Phono in
Aux
Phono
DVD
VTR
LD
Tuner
Rotate Effect
Rotate Effected
L ch out
R ch out
Power
EXT in 1
EXT in 2
EXT in 3
EXT in 4
L front ch
R front ch
L rear ch
R rear ch
Dolby
SQ opt
QS / 6ch
SQ org
Mix Factor
SQ-Symmetric
Upper / Lower
Lower / Upper
Fix Upper
Fix Lower
Fix L front
Fix R front
Fix L rear
Fix R rear
Front Level
Rear Level
L front
R front
L rear
R rear
Rear
Front
4ch
4ch Rear
4ch Front
4ch Rev
Aux 2
Aux 1
DVD
VTR
LD
Tuner
VIDEO out
undeclared
is 4558DD
is A1015
is C1815
TITLE
DRAWING_No.
QS / SQ Matrix Quad
Decoder & Pre Amplifier
SHEET
DATE
DESIGN
2016/04/11