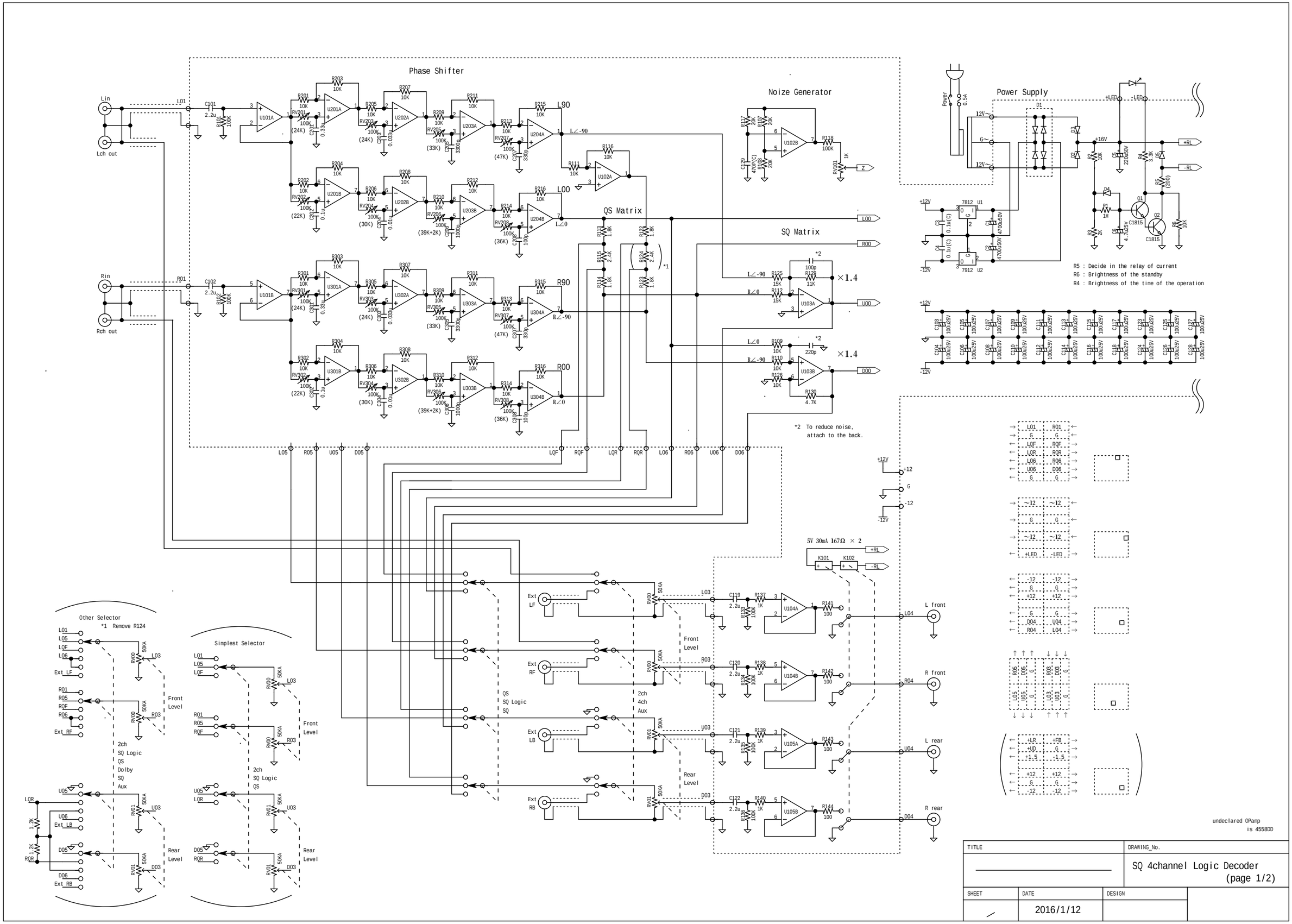

TITLE	DRAWING_No.
	SQ 4channel Logic Decoder (page 1/2)
SHEET	DATE	DESIGN
/	2016/1/12	

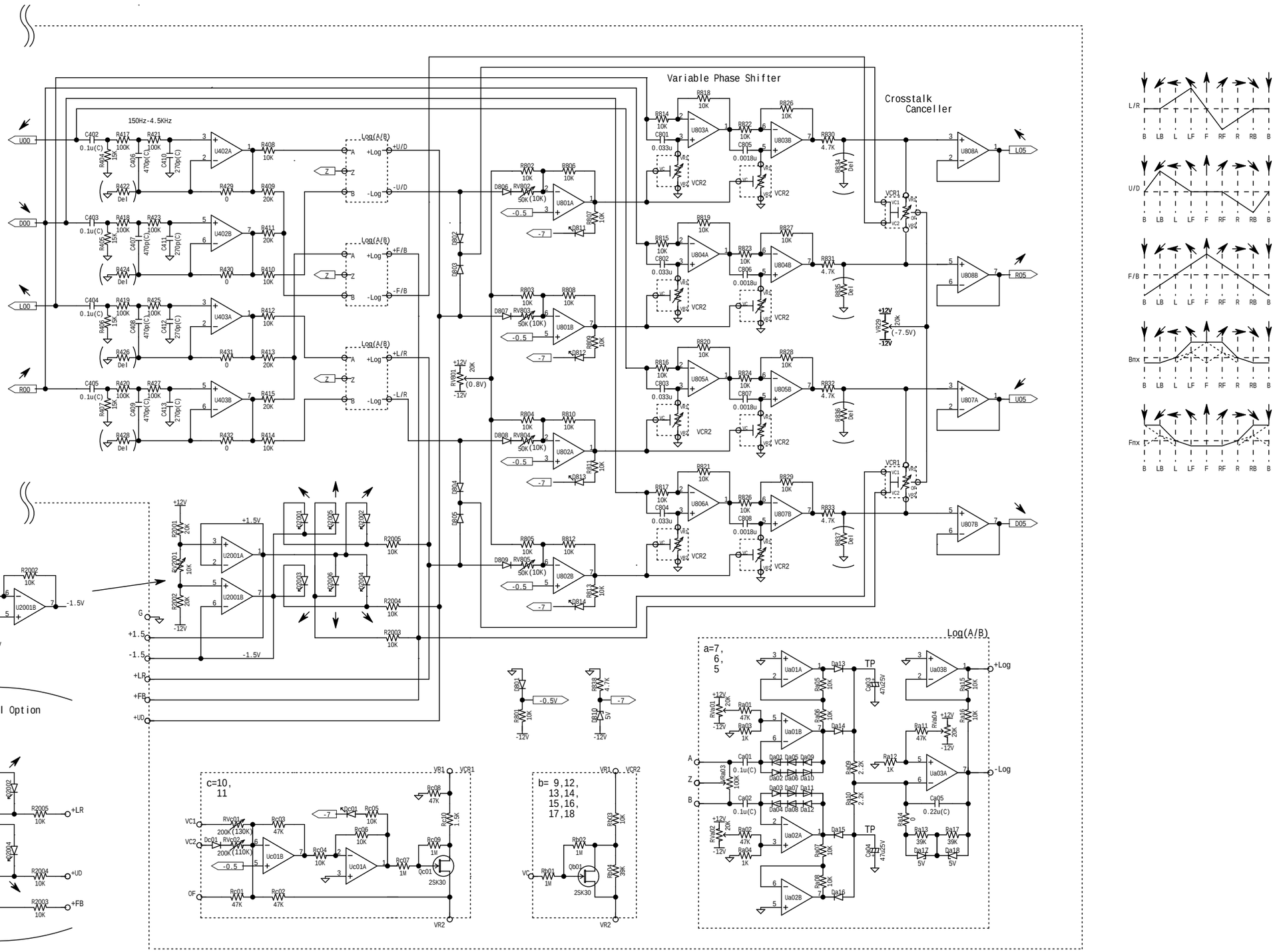

undeclared OPamp
is 4558DD

TITLE	DRAWING_No.	
	SQ 4channel Logic Decoder (page 2/2)	
SHEET	DATE	DESIGN
/	2015/1/12	